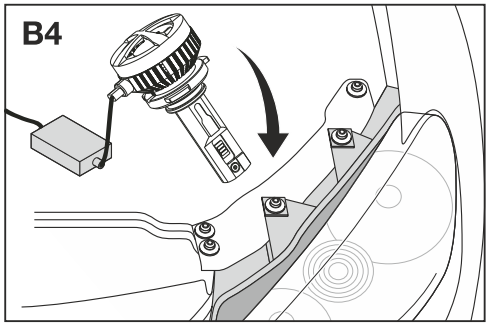

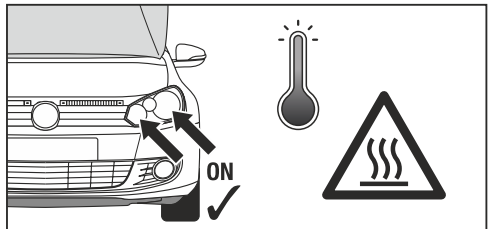

Caution! The cooling element on the back will heat when the headlamp is in operation.

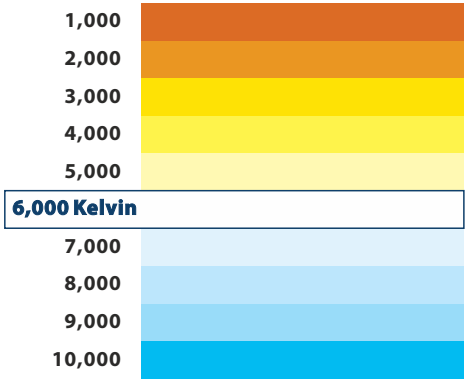

Blaupunkt LED lamps are energy efficient and last longer

Notes: The product box attached one red rubber gasket fits for 9005 and one back rubber gasket fits for 9006.

Installation Tips and Suggested Guidelines:

- Disconnect vehicle battery negative terminal before attempting to install LED lamps.
- Please do not touch the open LED section of the lamp at any time.
- While installing the LED lamps, please make sure that the reflector part of the headlight is wiped clean.
- It's suggested to complete wiring / connecting the LED lamps before reconnecting the battery terminal.
- Post installation, it is recommended that user check alignment of the lamps as recommended by the vehicle manufacturer.

BPIN Private Limited
47, Atlanta Society, Nariman Point, Mumbai - 400 021. Maharashtra. India.
Toll Free: 1800 209 6820 | info@blaupunktcar.in | Shop Online at www.blaupunktcar.in

BLAUPUNKT

BLAUPUNKT Brand established 1924 GERMANY

VELOCITY POWER

12V LIGHTING - 6000K

LED V19 PRO HP

Suitable for Car Projector, Reflector & Fog Lamp

HIGH POWER

H1 / H4 / H7 / H8 / H11 / H16 / H19 / H27 / 9005

100 watts Total Power | 6000 Kelvin | 4200 Lumens / Lamp | Superior Brightness

Enjoy it.

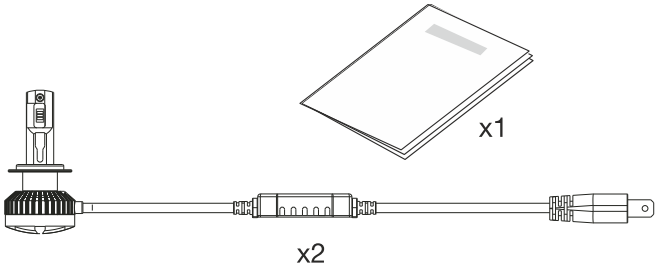

LED headlight bulb x 2

Product manual x 1

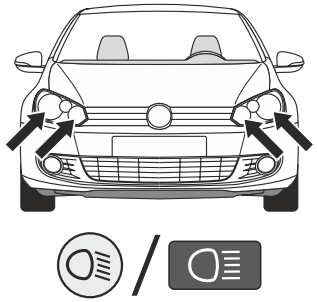

A1 Following models to replace step reference: A1 - A10

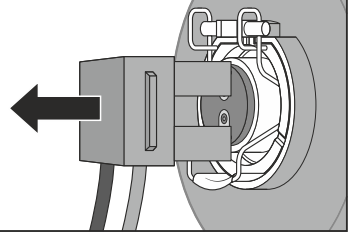

A2

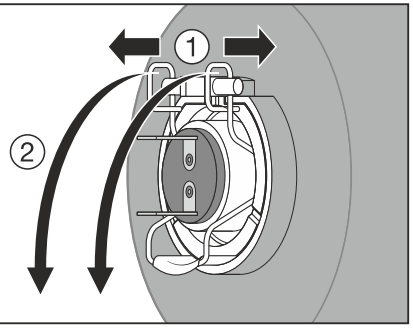

A3

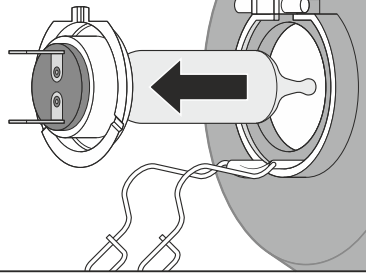

A4

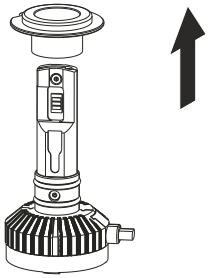

A5

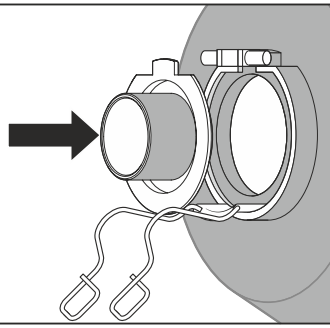

LED V19 PRO HP

A6

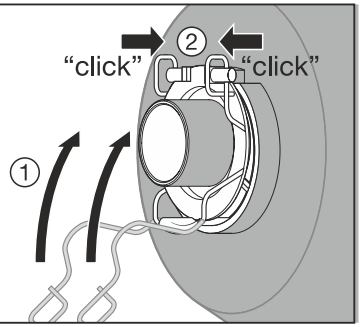

A7

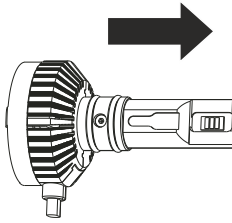

A8

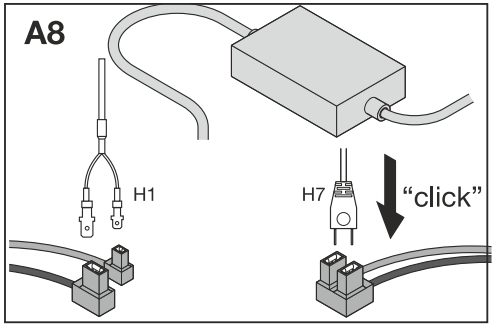

A9

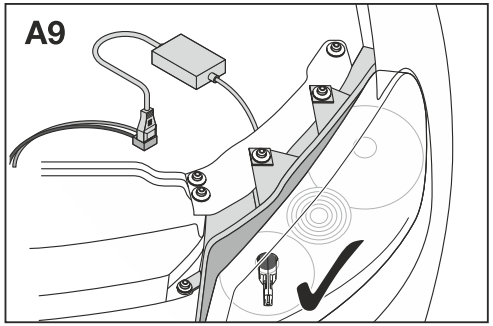

A10

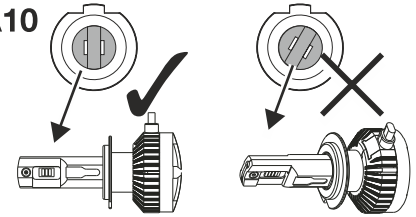

After installation, the chips should be in left-right symmetry, if the light scattered please rotate the light body to adjust.

B1 Following models to replace step reference: B1 - B4

≙H27
≙H8/H11/H16
≙9005/9006
≙9012

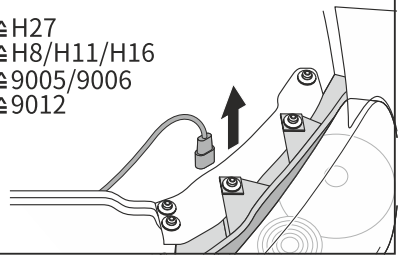

B2

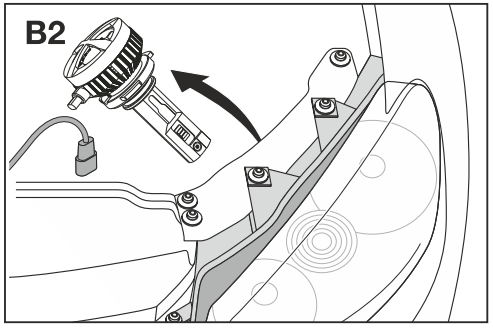
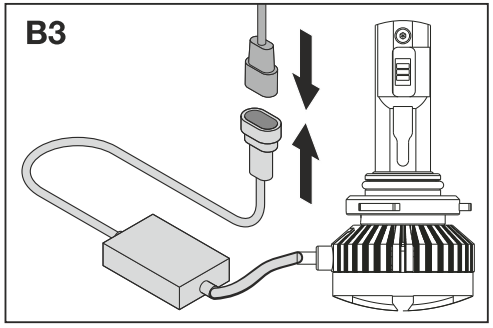
B3